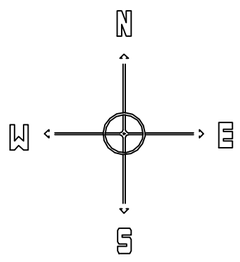

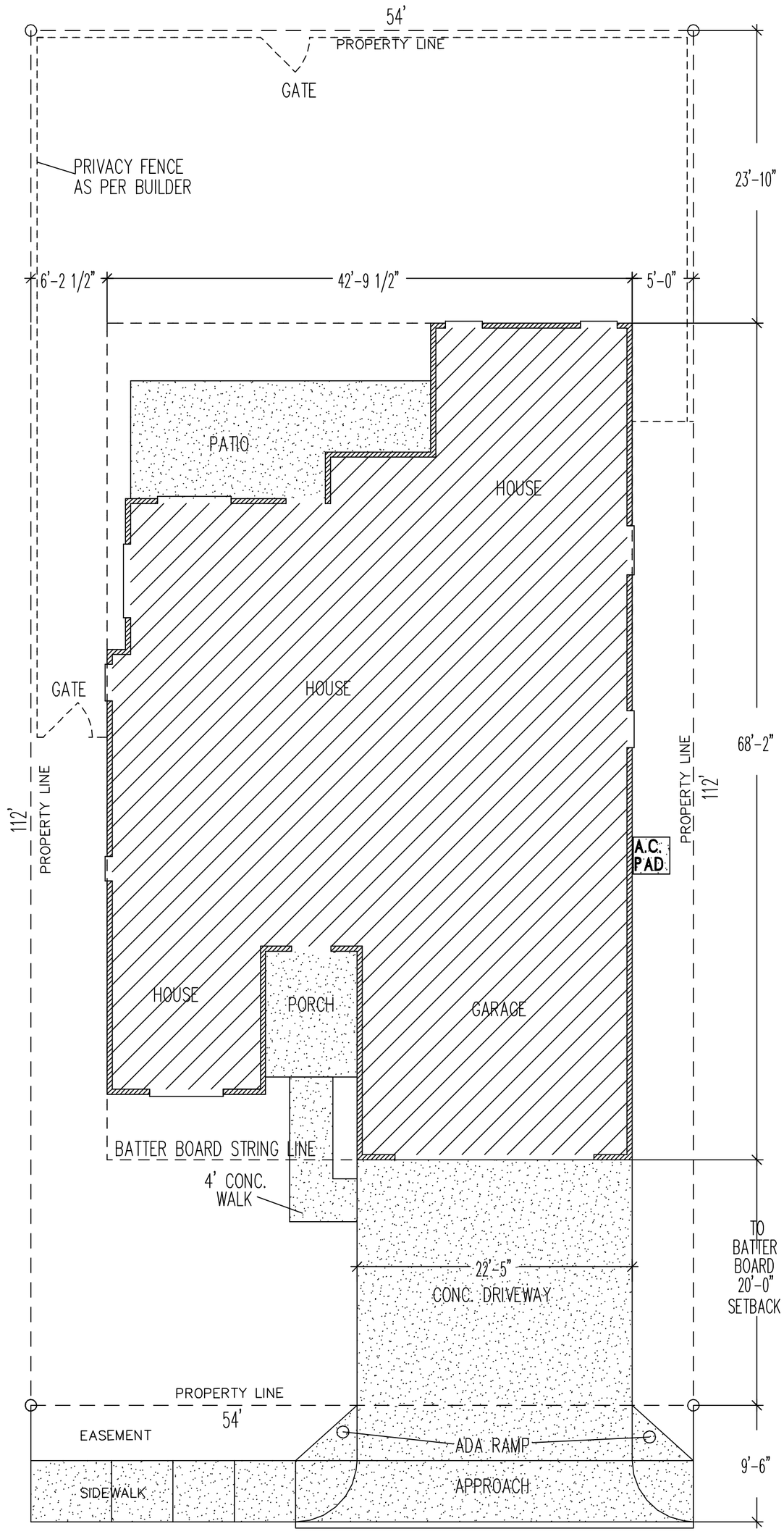

CONCRETE:

DRIVEWAY SQ.FT.= 448
APPROACH SQ.FT.= 246
LEADWALK SQ.FT.= 48
SIDEWALK SQ.FT.= 147
FRONT PORCH SQ.FT.= 76
BACK PORCH SQ.FT.= 202

TOTAL SQ.FT.= 1,167

GENERAL SHEET NOTES–
SITE PLAN:

SITE CONCRETE TO BE 3000 PSI REINFORCED WITH 6X6 WWF OR FIBER MESH OVER COMPACTED SUB GRADE.

DIMENSIONS TO FACE OF BRICK.

SLOPE ALL GRADES TOWARD FRONT & REAR PROPERTY LINES

FIELD VERIFY UNDERGROUND UTILITY LOCATIONS

N. 6TH CIRCLE

NESLONEY HOMES
Lubbock, TX

JASON NESLONEY
(806) 620-3031

BUILDER:

NESLONEY HOMES, LLC

ADDRESS:

831-N 6TH CIRCLE
WOLFFORTH, TEXAS

LEGAL:

IRON HORSE ADDITION 90

MAIN FLOOR LIVING/FRAME

1,788 /BRICK 1,862

GARAGE /FRAME

469 /BRICK 495

COVERED PORCHES

275 /BRICK .

FOR:
SPEC
PLAN NAME
CUSTOM
CHECKED
A.L.
DATE STARTED
.
DATE
JANUARY 03, 2022
SCALE
1/8"=1'

accuplanz

7329-19TH
LUBBOCK TX. 79407
806-785-8801

Designing Texas one floorplan at a time.

SHEET

1

SITE PLAN

SP-1 OF 1

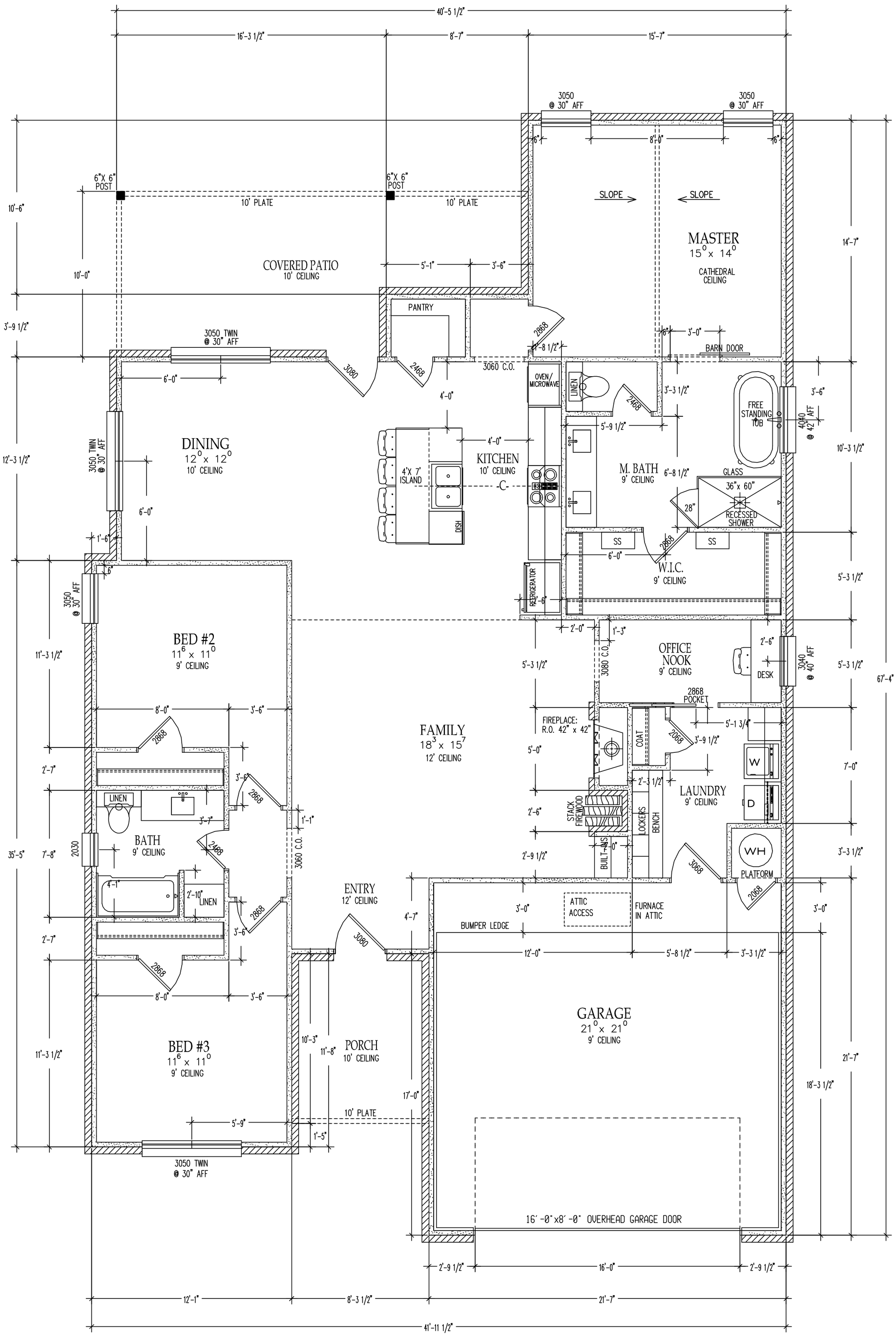

NESLONEY HOMES
Lubbock, TX

JASON NESLONEY
(806) 620-3031

BUILDER:

NESLONEY HOMES, LLC

ADDRESS:

831-N 6TH CIRCLE
WOLFFORTH, TEXAS

LEGAL:

IRON HORSE ADDITION 90

MAIN FLOOR LIVING/FRAME

1,788 /BRICK 1,862

GARAGE /FRAME

469 /BRICK 495

COVERED PORCHES

275 /BRICK .

FOR:

SPEC

PLAN NAME

CUSTOM

CHECKED

A.L.

DATE STARTED

.

DATE

JANUARY 03, 2022

SCALE

1/4"=1'

accuplanz

7329-19TH
LUBBOCK TX. 79407
806-785-8801

Designing Texas one floorplan at a time.

SHEET

2

FRAMING

A-1 OF 4

GENERAL SHEET NOTES–ROOF PLAN:

RAFTERS– 2X6 @ 24" O.C.
HIP/VALLEY/RIDGE– 2X8
PERLIN– DIVIDES RAFTER SPAN MAX 10' (2x6)
BRACING– 2X4 @ 6' O.C. TO PERLIN
COLLAR TIES– 2X4 @ 4' O.C. RIDGES ONLY

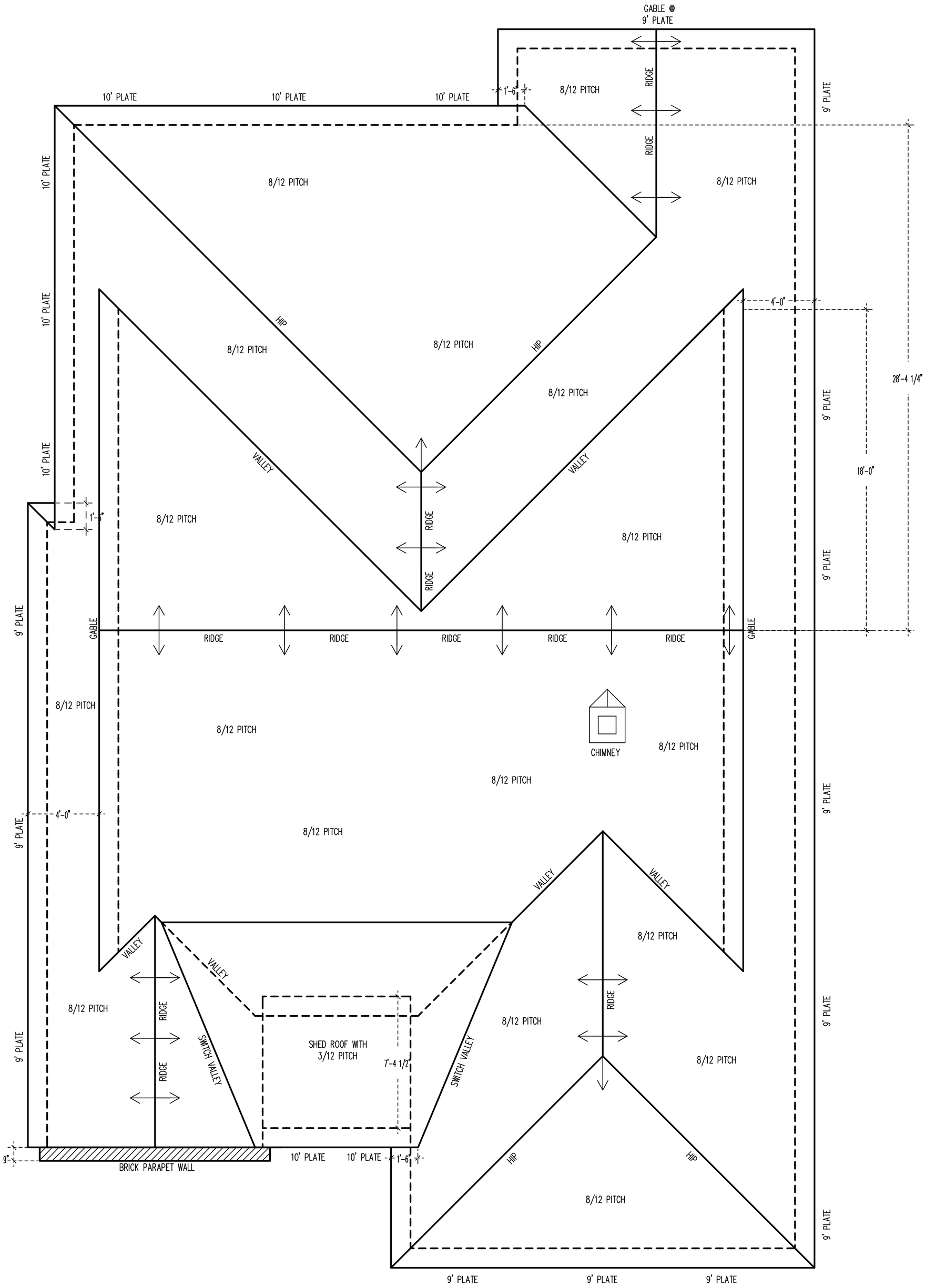

NESLONEY HOMES
Lubbock, TX

JASON NESLONEY
(806) 620-3031

BUILDER:

NESLONEY HOMES, LLC

ADDRESS:

831-N 6TH CIRCLE
WOLFFORTH, TEXAS

LEGAL:

IRON HORSE ADDITION 90

MAIN FLOOR LIVING/FRAME

1,788 /BRICK 1,862

GARAGE /FRAME

469 /BRICK 495

COVERED PORCHES

275 /BRICK .

FOR: SPEC
PLAN NAME CUSTOM
CHECKED A.L.
DATE STARTED .
DATE JANUARY 03, 2022
SCALE 1/4"=1'

accuplanz
7329-19TH
LUBBOCK TX. 79407
806-785-8801
Designing Texas one floorplan at a time.

SHEET
3
ROOF PLAN
A-2 OF 4

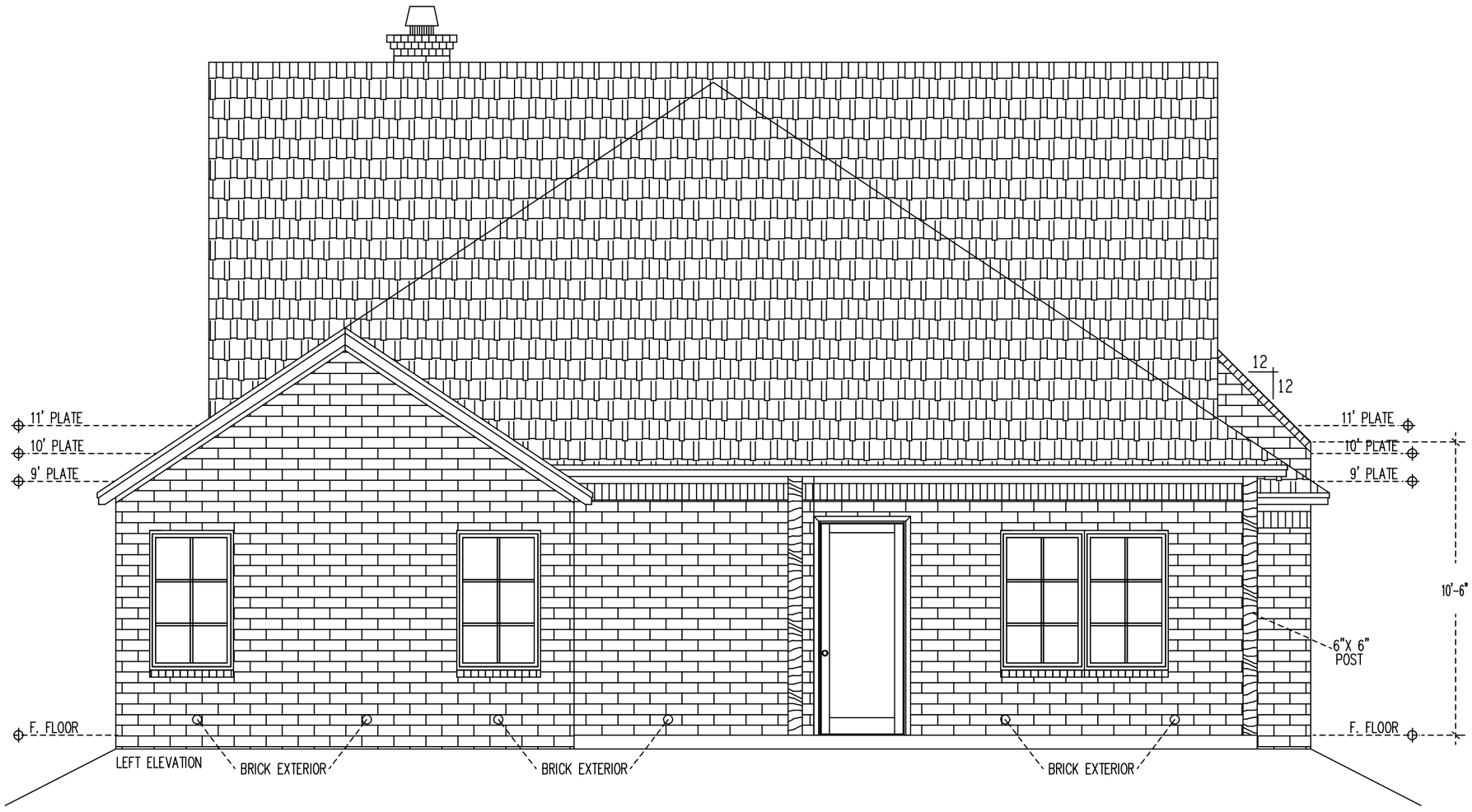

NESLONEY HOMES
Lubbock, TX

JASON NESLONEY
(806) 620-3031

BUILDER:

NESLONEY HOMES, LLC

ADDRESS:

831-N 6TH CIRCLE
WOLFFORTH, TEXAS

LEGAL:

IRON HORSE ADDITION 90

MAIN FLOOR LIVING/FRAME

1,788 /BRICK 1,862

GARAGE /FRAME

469 /BRICK 495

COVERED PORCHES

275 /BRICK .

FOR: SPEC
PLAN NAME CUSTOM
CHECKED A.L.
DATE STARTED .
DATE JANUARY 03, 2022
SCALE 1/4"=1'

accuplanz

7329-19TH
LUBBOCK TX. 79407
806-785-8801

Designing Texas one floorplan at a time.

SHEET

4

ELEVATIONS

A-3 OF 4

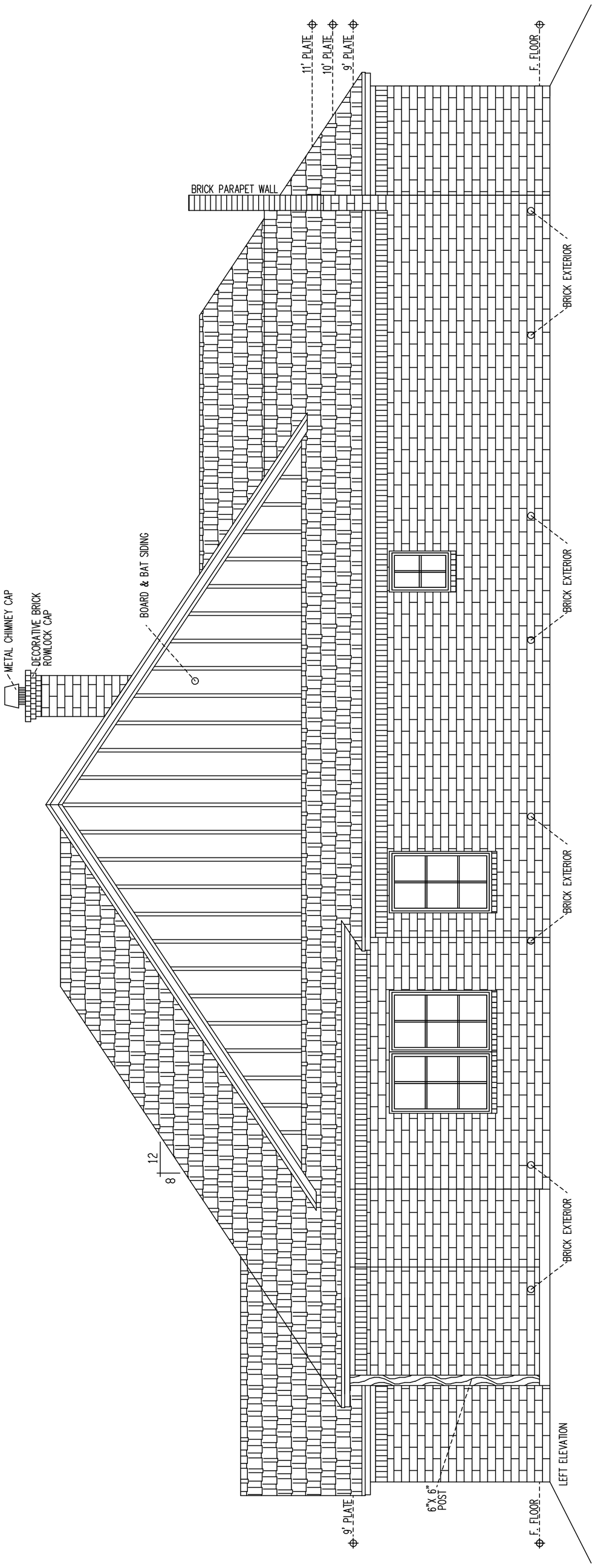

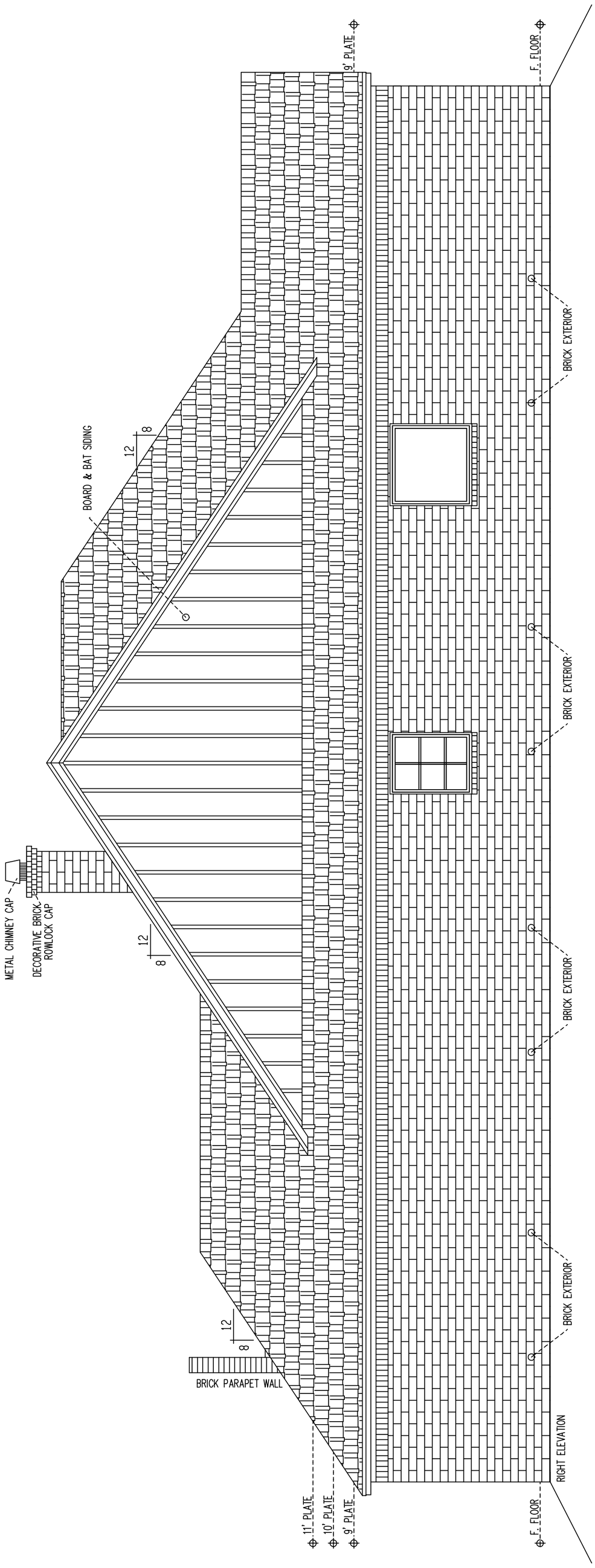

NESLONEY HOMES
Lubbock, TX

JASON NESLONEY
(806) 620-3031

BUILDER:

NESLONEY HOMES, LLC

ADDRESS:

831-N 6TH CIRCLE
WOLFFORTH, TEXAS

LEGAL:

IRON HORSE ADDITION 90

MAIN FLOOR LIVING/FRAME

1,788 /BRICK 1,862

GARAGE /FRAME

469 /BRICK 495

COVERED PORCHES

275 /BRICK .

FOR:

SPEC

PLAN NAME

CUSTOM

CHECKED

A.L.

DATE STARTED

.

DATE

JANUARY 03, 2022

SCALE

1/4"=1'

accuplanz
7329-19TH
LUBBOCK TX. 79407
806-785-8801

Designing Texas one floorplan at a time.

SHEET

5

ELEVATIONS

A-4 OF 4

ELECTRICAL SYMBOL LEGEND

LIGHTS

- LIGHT
- ATTIC
- UNDERCOUNTER
- INDIRECT
- SCONCE/COACH
- RECESSED
- EYEBALL
- SOFFIT
- WATER PROOF
- FLOOD
- 2 BULB FLUORESCENT
- 4 BULB FLUORESCENT
- CHANDELIER

SWITCHES

- SINGLE
- 3/ WAY
- ATTIC
- MOTION SENSOR
- DIMMER
- X-MAS
- JAMB

VENTS

- VENT/HEAT/LIGHT
- VENT/HEAT
- VENT/LIGHT
- LIGHT/HEAT
- VENT

PLUGS

SINGLE		110
WP	WEATHER PROOF	110
GFI	GFI	110
DS GFI	DOWN STREAM GFI	110
FLOOR	FLOOR	110
X-MAS	X-MAS	110
ATTIC	ATTIC	110
GRG.	GARAGE DOOR	110
220	RANGE/OVEN	220
MICRO.	MICROWAVE	110
DISH/DISP	DISHWASHER & DISPOSAL	110

MISC.

- PHONE OUTLET
- TV OUTLET
- THERMOSTAT
- CHIME
- RANGE HOOD
- PANEL BOX
- CONDENSING UNIT
- FAN & LIGHT
- FAN ONLY
- SMOKE DETECTOR
- CARBON MONOXIDE DETECTOR

GENERAL SHEET NOTES - ELECTRICAL:

VERIFY ALL ELECTRICAL RECEPTACLES LIGHT LOCATIONS, AND LIGHT SWITCH LOCATION WITH BUILDER PRIOR TO DRY WALL CONSTRUCTION

VERIFY ALL G.F.I. RECEPTACLES LOCATIONS PER CODE.

LOCATE SMOKE DETECTOR NO LESS THAN 3' FROM ANT RETURN AIR VENT, ALSO TO BE HARDWIRED IN WITH BATTERY BACKUP.

VERIFY ALL CABLE AND TELEPHONE JACKS WITH OWNER BEFORE INSTALLATION.

ALL EXTERIOR ELECTRICAL OUTLETS AND FIXTURES TO BE WEATHER-PROOF.

VERIFY APPLIANCE AND EQUIPMENT ELECTRICAL REQUIREMENTS WITH BUILDER.

VERIFY ELECTRICAL POWER & RECEPTACLE REQUIREMENTS FOR EXTERIOR EQUIPMENT (SPRINKLER SYSTEM, JACUZZI TUB, ETC).

ELECTRICAL LAYOUT IS SCHEMATIC ONLY. FINAL LAYOUT TO BE VERIFIED BY BUILDER.

PROVIDE ELECTRONIC EYE AND / OR SAFETY DEVICE ON ALL GARAGE DOORS (WHERE APPLICABLE).

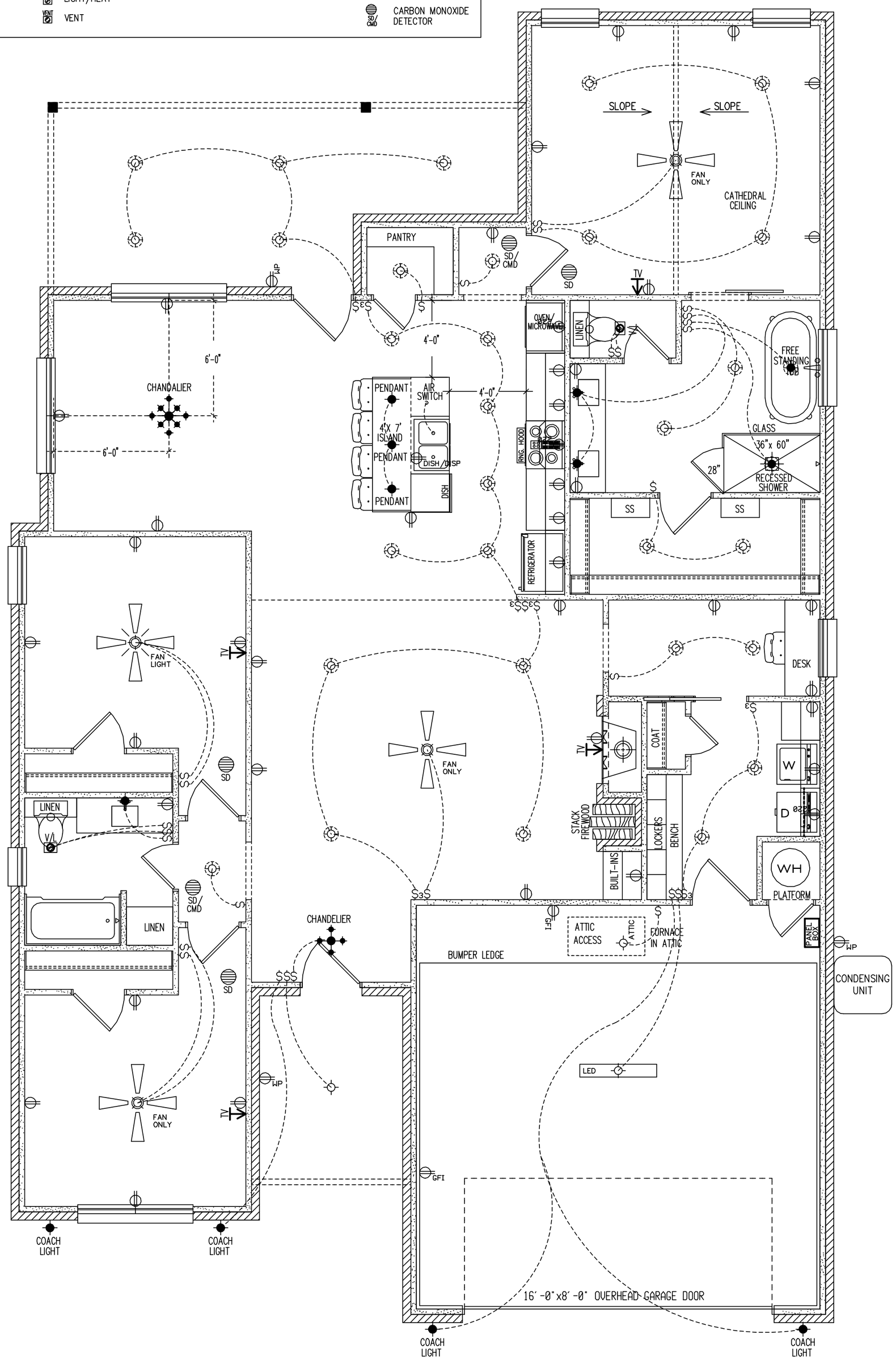

NESLONEY HOMES
Lubbock, TX
JASON NESLONEY
(806) 620-3031

BUILDER:

NESLONEY HOMES, LLC

ADDRESS:

831-N 6TH CIRCLE
WOLFFORTH, TEXAS

LEGAL:

IRON HORSE ADDITION 90

MAIN FLOOR LIVING/FRAME

1,788 /BRICK 1,862

GARAGE /FRAME

469 /BRICK 495

COVERED PORCHES

275 /BRICK .

FOR:

SPEC

PLAN NAME

CUSTOM

CHECKED

A.L.

DATE STARTED

.

DATE

JANUARY 03, 2022

SCALE

1/4"=1'

accuplanz
7329-19TH
LUBBOCK TX. 79407
806-785-8801
Designing Texas one floorplan at a time.

SHEET

6

ELECTRICAL

E-1 OF 1

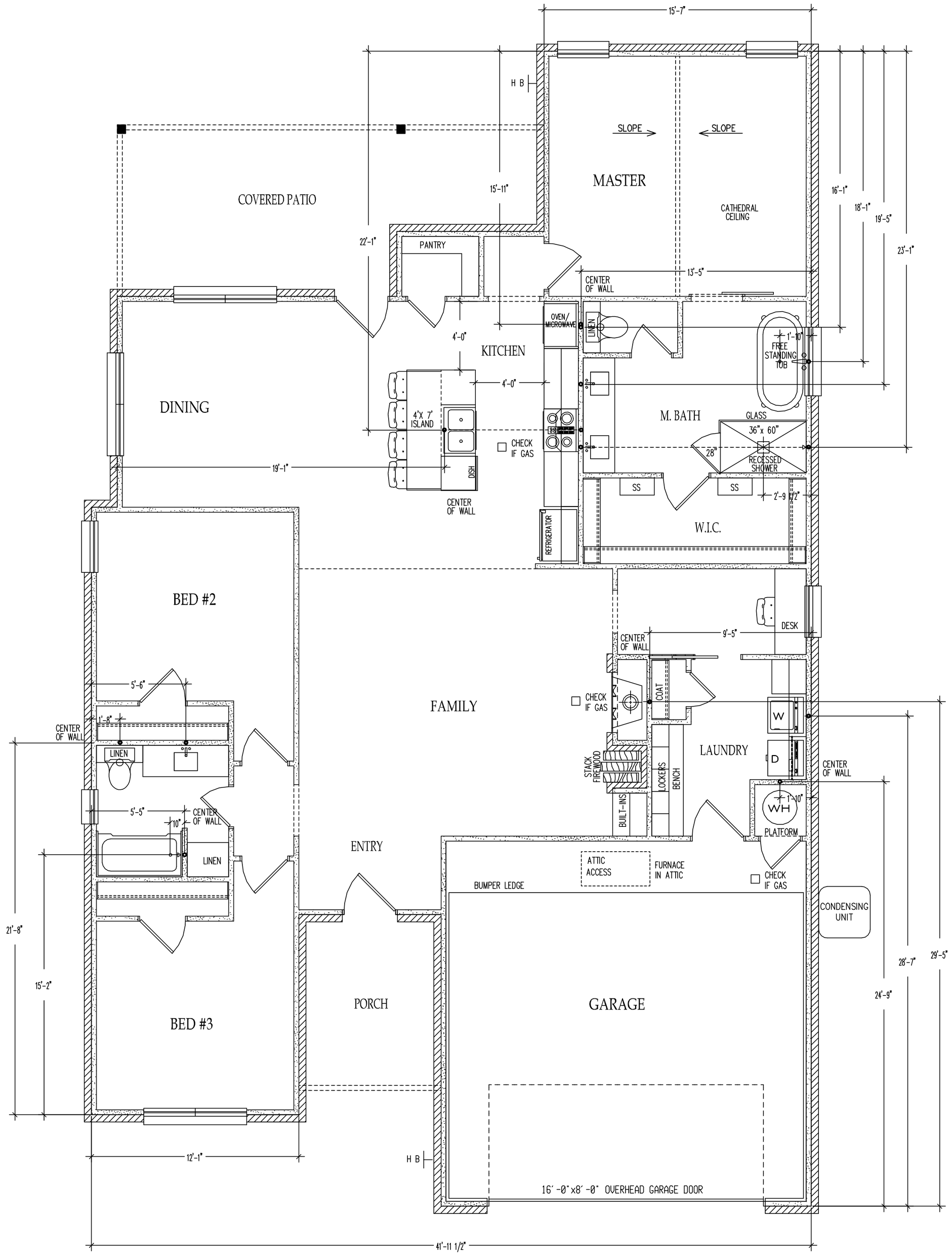

NESLONEY HOMES
Lubbock, TX

JASON NESLONEY
(806) 620-3031

BUILDER:

NESLONEY HOMES, LLC

ADDRESS:

831-N 6TH CIRCLE
WOLFFORTH, TEXAS

LEGAL:

IRON HORSE ADDITION 90

MAIN FLOOR LIVING/FRAME

1,788 /BRICK 1,862

GARAGE /FRAME

469 /BRICK 495

COVERED PORCHES

275 /BRICK .

FOR: SPEC
PLAN NAME: CUSTOM
CHECKED: A.L.
DATE STARTED: .
DATE: JANUARY 03, 2022
SCALE: 1/4"=1'

accuplanz
7329-19TH
LUBBOCK TX. 79407
806-785-8801

Designing Texas one floorplan at a time.

SHEET

7

PLUMBING

P-1 OF 1

GENERAL SHEET NOTES – FOUNDATION:

SLOPE ALL GRADES TOWARD FRONT–REAR PROPERTY LINES

VERIFY ALL DIMENSIONS W/ FLOOR PLAN.

DIMENSIONS TO FACE OF BRICK.

FIELD VERIFY UNDERGROUND UTILITY LOCATIONS.

ALL NEW FOUNDATION WALLS / FOOTINGS ARE ASSUMED TO BE BEARING ON VIRGIN SOIL.

THE AREA WITHIN THE FOUNDATION WALLS SHALL HAVE ALL VEGETATION, TOP SOIL AND FOREIGN MATERIAL REMOVED.

ALL WOOD PLACED IN DIRECT CONTACT WITH CONCRETE SHALL BE PRESSURE TREATED.

ANCHOR WOOD SILL PLATES TO FOUNDATION WITH GALVANIZED MUDSILL ANCHORS, SIMPSON STRONG–TIE COMPANY MODEL MAS/MASA OR EQUAL.

THE BOTTOM OF FOOTING ELEVATION SHALL BE 12" MINIMUM BELOW NATURAL GROUND SURFACE (GRADE).

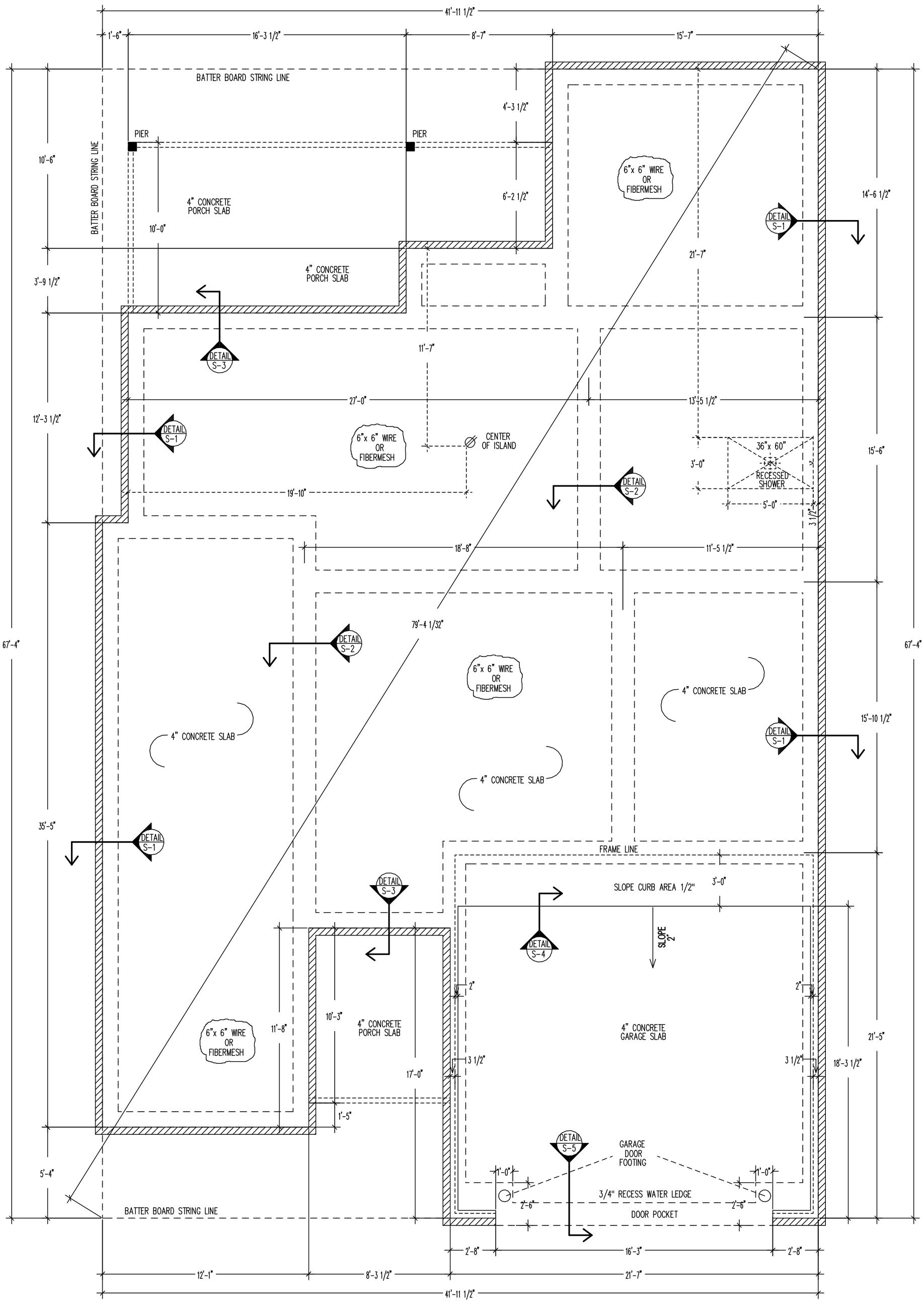

NESLONEY HOMES
Lubbock, TX

JASON NESLONEY
(806) 620-3031

BUILDER:

NESLONEY HOMES, LLC

ADDRESS:

831-N 6TH CIRCLE
WOLFFORTH, TEXAS

LEGAL:

IRON HORSE ADDITION 90

MAIN FLOOR LIVING/FRAME

1,788 /BRICK 1,862

GARAGE /FRAME

469 /BRICK 495

COVERED PORCHES

275 /BRICK .

FOR: SPEC
PLAN NAME CUSTOM
CHECKED A.L.
DATE STARTED .
DATE JANUARY 03, 2022
SCALE 1/4"=1'

accuplanz
7329-19TH
LUBBOCK TX. 79407
806-785-8801
Designing Texas one floorplan at a time.

SHEET

8

FOUNDATION

S-1 OF 2

WALL SECTION

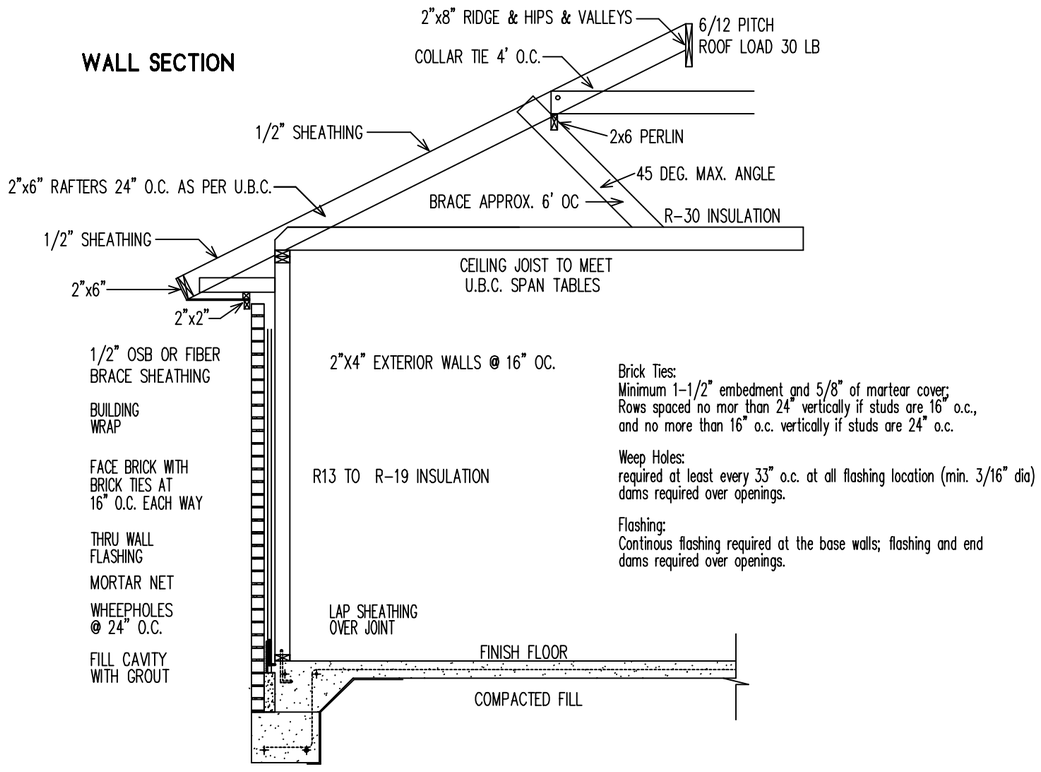

Brick Ties:
Minimum 1-1/2" embedment and 5/8" of mortear cover;
Rows spaced no mor than 24" vertically if studs are 16" o.c.,
and no more than 16" o.c. vertically if studs are 24" o.c.

Weep Holes:
required at least every 33" o.c. at all flashing location (min. 3/16" dia)
dams required over openings.

Flashing:
Continous flashing required at the base walls; flashing and end
dams required over openings.

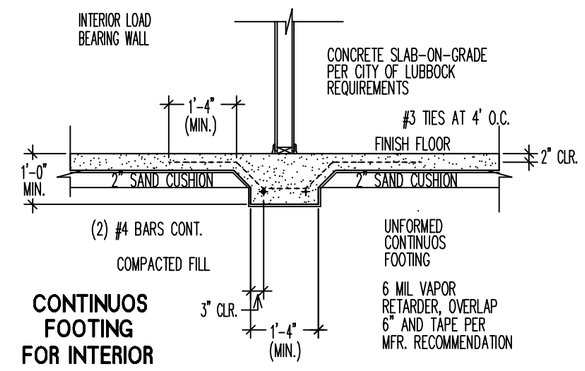

CONTINUOS FOOTING FOR INTERIOR LOAD BEARING WALL DETAIL: S-2

* FOR ONE AND TWO STORY CONSTRUCTION

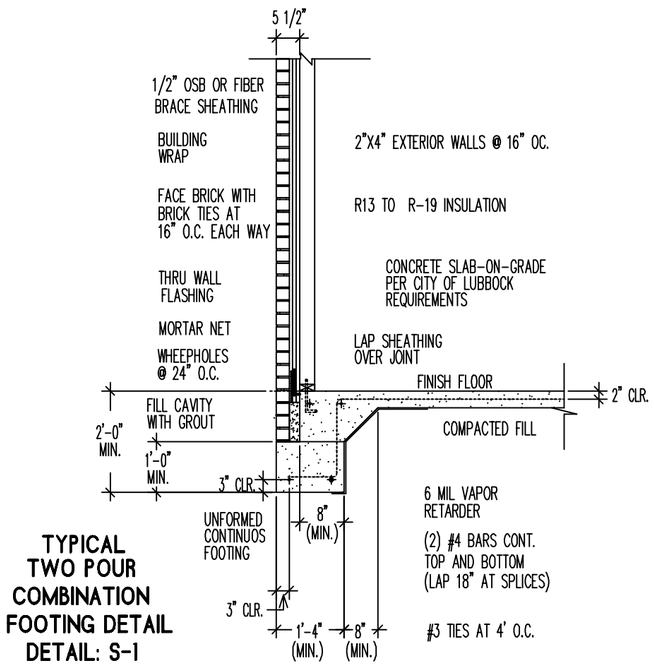

TYPICAL TWO POUR COMBINATION FOOTING DETAIL DETAIL: S-1

* BURIED BRICK LEDGE
* FOR ONE AND TWO STORY CONSTRUCTION

BUMPER LEDGE DETAIL DETAIL: S-4

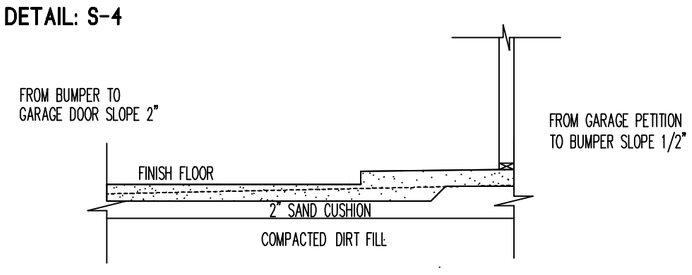

PORCH SLAB DETAIL DETAIL: S-3

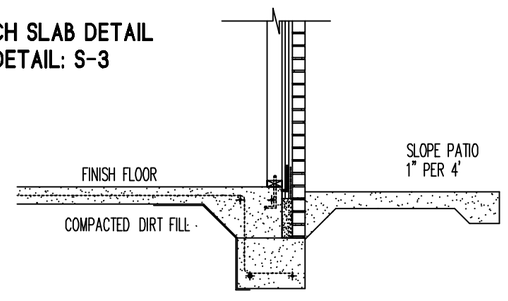

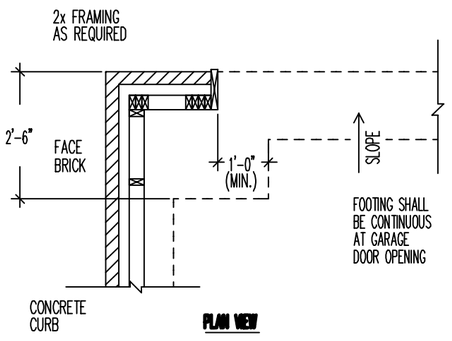

TWO-POUR SPOT FOOTING AT GARAGE OPENING DETAIL: S-5

* BURIED BRICK LEDGE

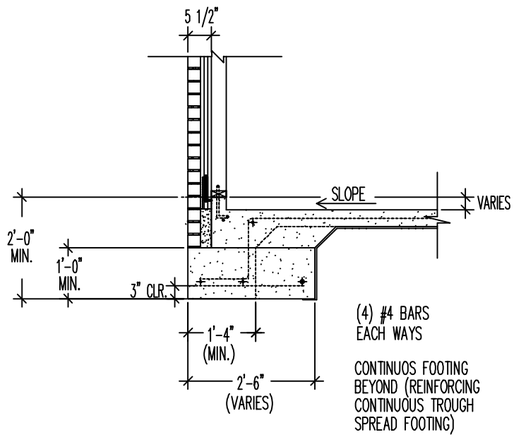

NESLONEY HOMES
Lubbock, TX

JASON NESLONEY
(806) 620-3031

BUILDER:

NESLONEY HOMES, LLC

ADDRESS:

831-N 6TH CIRCLE
WOLFFORTH, TEXAS

LEGAL:

IRON HORSE ADDITION 90

MAIN FLOOR LIVING/FRAME

1,788 /BRICK 1,862

GARAGE /FRAME

469 /BRICK 495

COVERED PORCHES

275 /BRICK .

FOR:

SPEC

PLAN NAME

CUSTOM

CHECKED

A.L.

DATE STARTED

.

DATE

JANUARY 03, 2022

SCALE

1/4"=1'

accuplanz

7329-19TH
LUBBOCK TX. 79407
806-785-8801

Designing Texas one floorplan at a time.

SHEET

9

DETAILS

S-2 OF 2